
IME
72
Conto 72-Pt
72

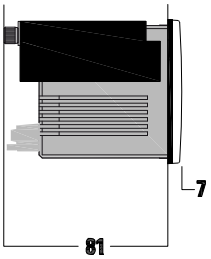
7
81

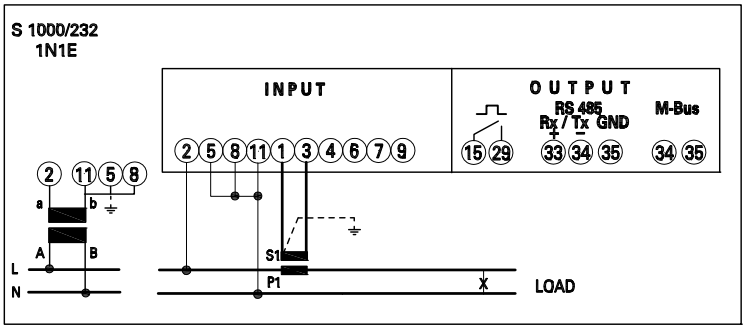
S 1000/232
1N1E
INPUT
OUTPUT
RS 485
Rx / Tx GND
M-Bus
2 5 8 11 1 3 4 6 7 9
15 29 33 34 35 34 35
2 11 5 8
a b
A B
L
N
S1
P1
LOAD

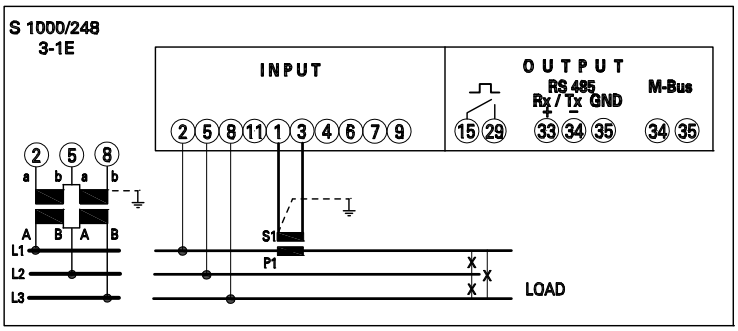
S 1000/248
3-1E
INPUT
OUTPUT
RS 485
Rx / Tx GND
M-Bus
2 5 8 11 1 3 4 6 7 9
15 29 33 34 35 34 35
2 5 8
a b a b
A B A B
L1
L2
L3
S1
P1
LOAD

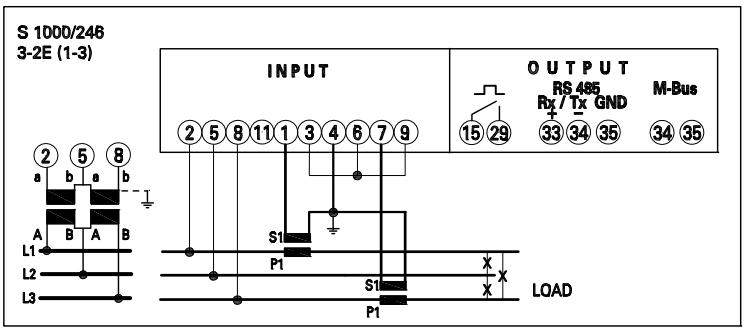
S 1000/246
3-2E (1-3)
INPUT
OUTPUT
RS 485
Rx / Tx GND
M-Bus
2 5 8 11 1 3 4 6 7 9
15 29 33 34 35 34 35
2 5 8
a b a b
A B A B
L1
L2
L3
S1
P1
LOAD

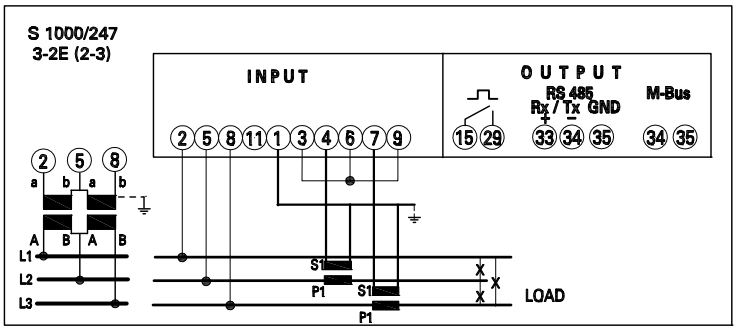
S 1000/247
3-2E (2-3)
INPUT
OUTPUT
RS 485
Rx / Tx GND
M-Bus
2 5 8 11 1 3 4 6 7 9
15 29 33 34 35 34 35
2 5 8
a b a b
A B A B
L1
L2
L3
S1
P1
LOAD

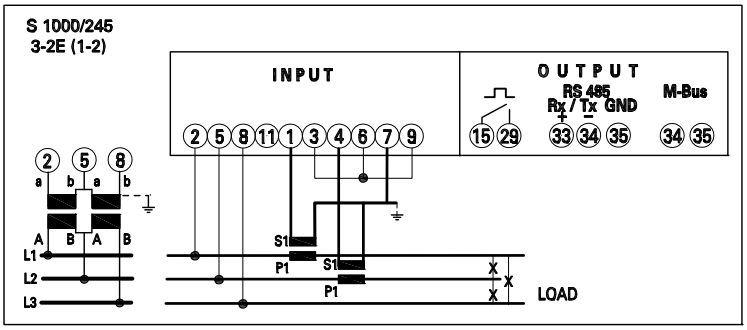
S 1000/245
3-2E (1-2)
INPUT
OUTPUT
RS 485
Rx / Tx GND
M-Bus
2 5 8 11 1 3 4 6 7 9
15 29 33 34 35 34 35
2 5 8
a b a b
A B A B
L1
L2
L3
S1
P1
LOAD

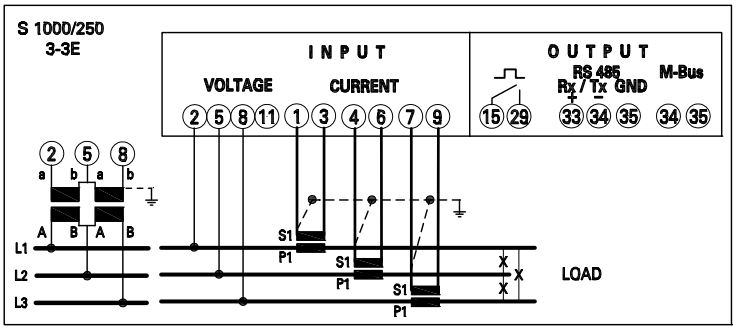
S 1000/250
3-3E
INPUT
VOLTAGE
CURRENT
OUTPUT
RS 485
Rx / Tx GND
M-Bus
2 5 8 11 1 3 4 6 7 9
15 29 33 34 35 34 35
2 5 8
a b a b
A B A B
L1
L2
L3
S1
P1
LOAD

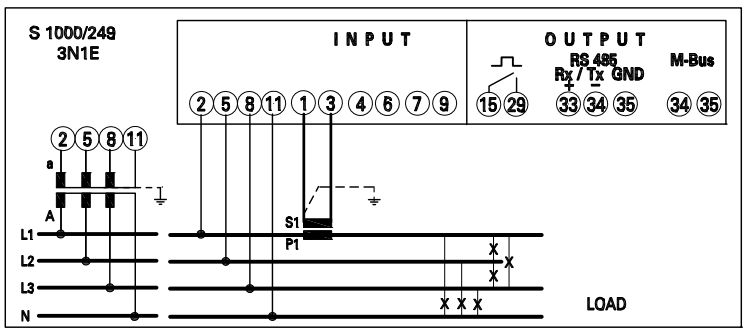
S 1000/249
3N1E
INPUT
OUTPUT
RS 485
Rx / Tx GND
M-Bus
2 5 8 11 1 3 4 6 7 9
15 29 33 34 35 34 35
2 5 8 11
a
A
L1
L2
L3
N
S1
P1
LOAD

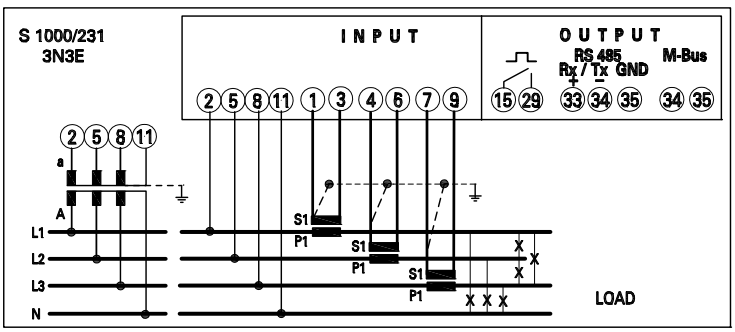
S 1000/231
3N3E
INPUT
OUTPUT
RS 485
Rx / Tx GND
M-Bus
2 5 8 11 1 3 4 6 7 9
15 29 33 34 35 34 35
2 5 8 11
a
A
L1
L2
L3
N
S1
P1
LOAD